DRAWING NO.	REV	
C650ADMX	M	**Customer Drawing**

REVISION HISTORY

REV	DESCRIPTION (ECO)	DATE	APPROVED
L	ADD SUFFIX PFC CLEAR DEHP FREE MAT. ECO 10372	03/02/20	AK
M	UPDATE MAT. DESCRIPTION ON SHEET 2. eco 10448	4/13/20	AK

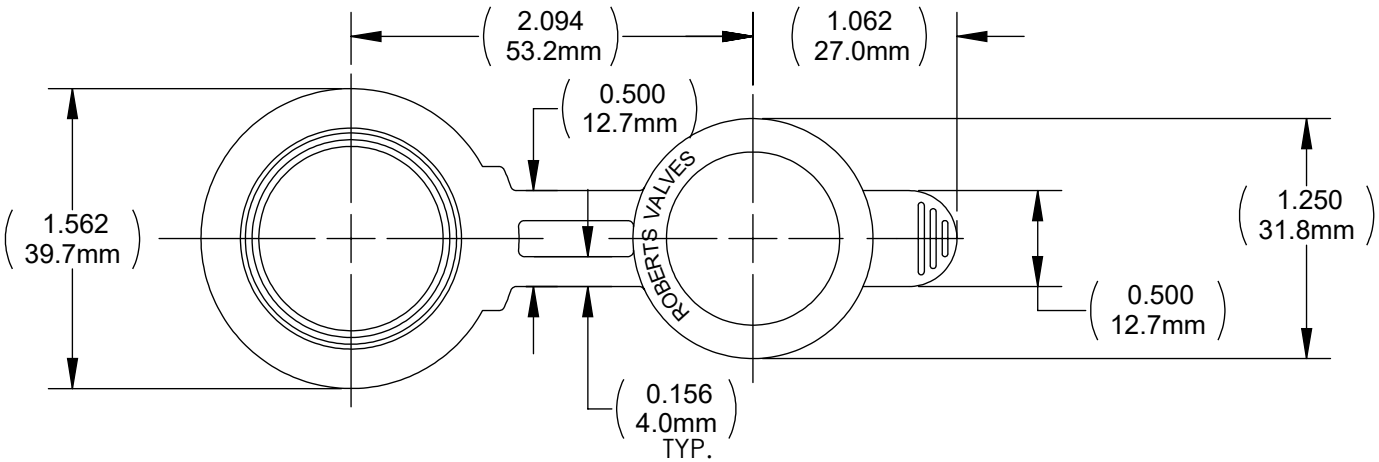

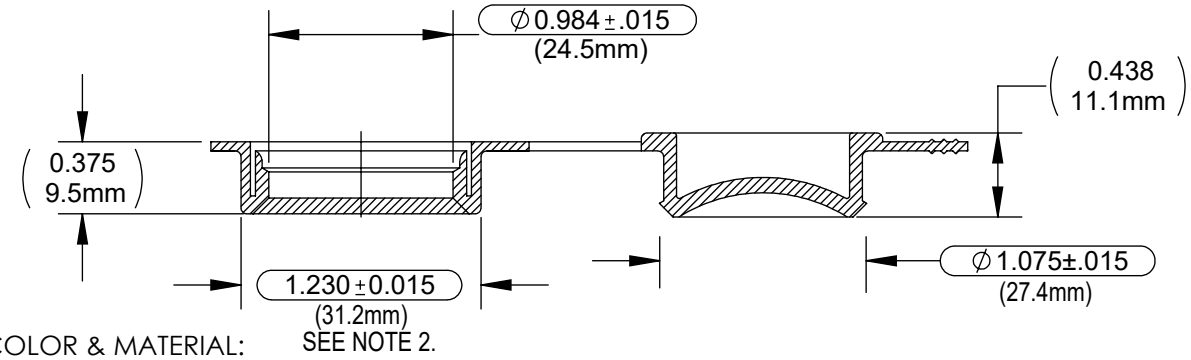

NOTES:

1. SUFFIX INDICATES COLOR & MATERIAL:

   NO SUFFIX - RED, PVC
   DB - ROYAL BLUE, PVC
   PF - DEHP FREE RED, PVC
   PFC - DEHP FREE CLEAR, PVC

2. THIS DIA. MUST BE CHECKED WITH RING GAUGE 1.230 ±.0005
   THE GAUGE SHALL BE APPLIED WITH AXIAL FORCE MIN. 1 (Lbf)

3. CRITICAL DIMENSIONS ARE CIRCLED, AND SUBJECT TO INSPECTION.

4. DIMENSIONS IN PARENTHESES ARE FOR REFERENCE ONLY.

5. ALL DIMENSIONS ARE IN INCHES WITH NOMINAL,
   DIMENSIONS IN MILLIMETERS BELOW.

QUALITY CRITERIA:

O.D. FLASH: 0.030 MAX. (0.76MM)
GATE VESTIGE: 0.020 MAX. (0.5MM)
EMBEDDED PARTICLES, BUBBLES,SPOTS, STAINS: 0.3mm² MAX. NO MORE THAN 5 PER PART.

MOLDED PARTS:
GATES, PARTING LINES, AND FLASH PER QUALITY CRITERIA

PROPRIETARY AND CONFIDENTIAL
THE INFORMATION CONTAINED IN THIS DRAWING IS SOLE PROPERTY OF HALKEY-ROBERTS CORPORATION ST. PETERSBURG, FL. ANY REPRODUCTION IN PART OR AS A WHOLE WITHOUT THE WRITTEN PERMISSION OF HALKEY-ROBERTS CORPORATION IS PROHIBITED.

DRAWN BY	DMC	DATE	09/14/2015
APPROVED BY		DATE	
MATERIAL			
FINISH			

UNLESS OTHERWISE SPECIFIED:
DIMENSIONS ARE IN INCHES
TOLERANCES:
ANGULAR: ± 1°
TWO PLACE DECIMAL ± .01
THREE PLACE DECIMAL ± .005

THIRD ANGLE PROJECTION

HR® Halkey-Roberts®

TITLE **DRAIN CLOSURE**

SIZE	DRAWING NO.	REV
A	C650ADMX	M
SCALE 1:1	DO NOT SCALE DRAWING	SHEET 1 OF 2